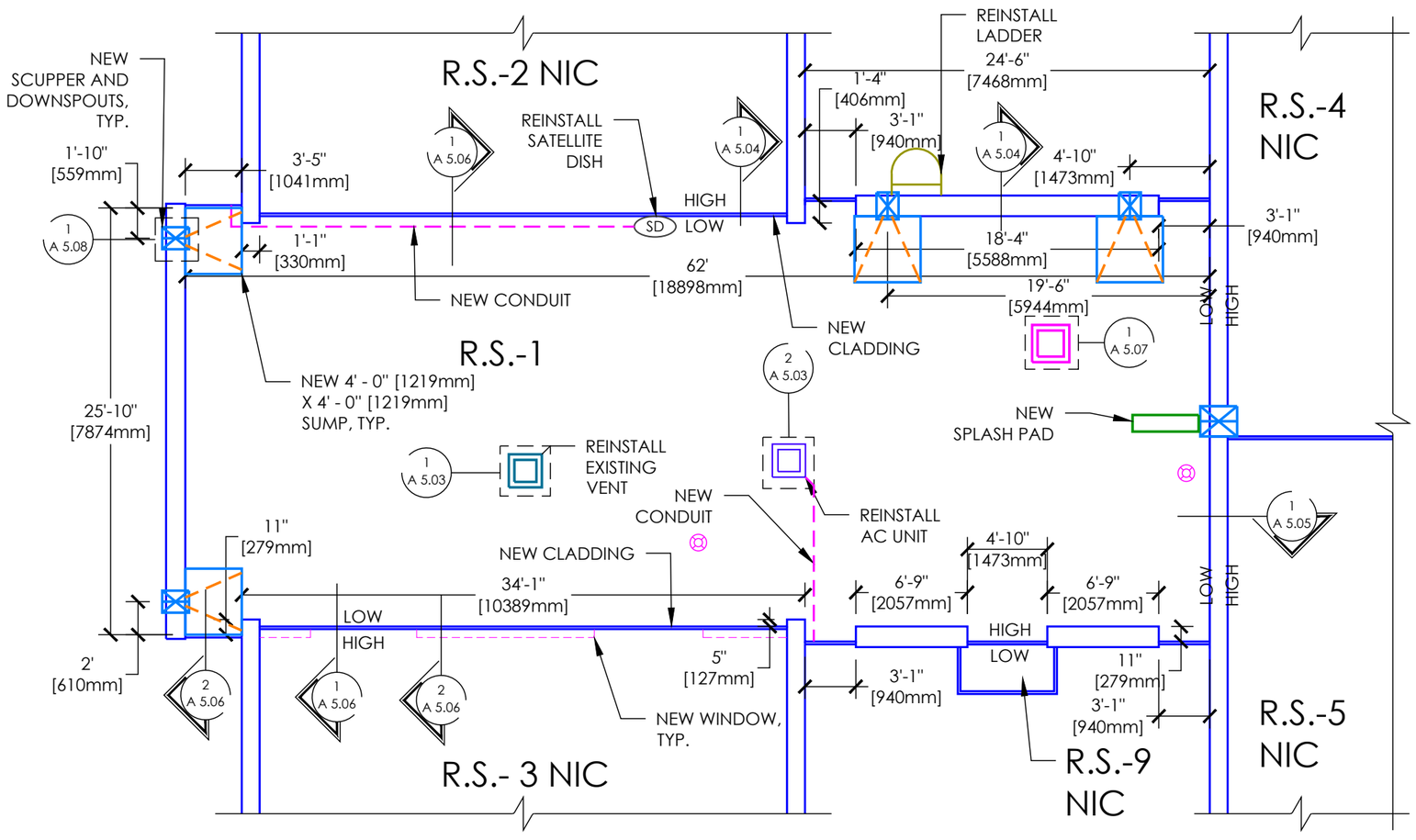

GENERAL NOTES

1. ROOF SECTION 1 AREA = 1,650 FT² [153 m²]
2. NEW ROOF COMPOSITION:
   - EXISTING WOOD DECK
   - NEW DENSDECK
   - NEW VAPOUR BARRIER
   - NEW SLOPED EPS INSULATION
   - NEW 2" [51 mm] POLYISO INSULATION
   - NEW SBS COMPOSITE PANEL
   - NEW SBS CAP SHEET

LEGEND

- ROOF EDGE
- ROOF PARAPET
- HIGH / LOW — ADJACENT ROOF EDGE
- LADDER
- WINDOW
- CONDUIT
- PIPE PENETRATION
- CHIMNEY
- VENT
- AC UNIT
- DRAINAGE ROOF SCUPPER
- SD — SATELLITE DISH
- SPLASH PAD

KEY PLAN

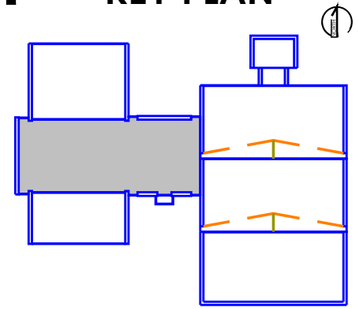

RMIS ENGINEERING

389 MAXWELL CRESCENT
Regina, SK S4N 5X9
www.rmiseng.ca
Phone 306.352.4606
Fax 306.352.4607

PROVINCE OF MANITOBA REGISTERED PROFESSIONAL ENGINEER
S.M. CROW
Member
37418

FIRE HALL #23
C.13.MB.35-18.05.03

880 DALHOUSIE DRIVE
WINNIPEG, MB R3T 2Z9

CITY OF WINNIPEG

4TH FLOOR - 185 KING STREET
WINNIPEG, MB R3B 1J1

No.	DATE	DESCRIPTION

DESIGNED BY	SMC	05/04/2018
DRAWN BY	CJB	05/04/2018
REVIEWED BY	SMC	05/04/2018

ROOF SECTION 1 PLAN

A 1.03